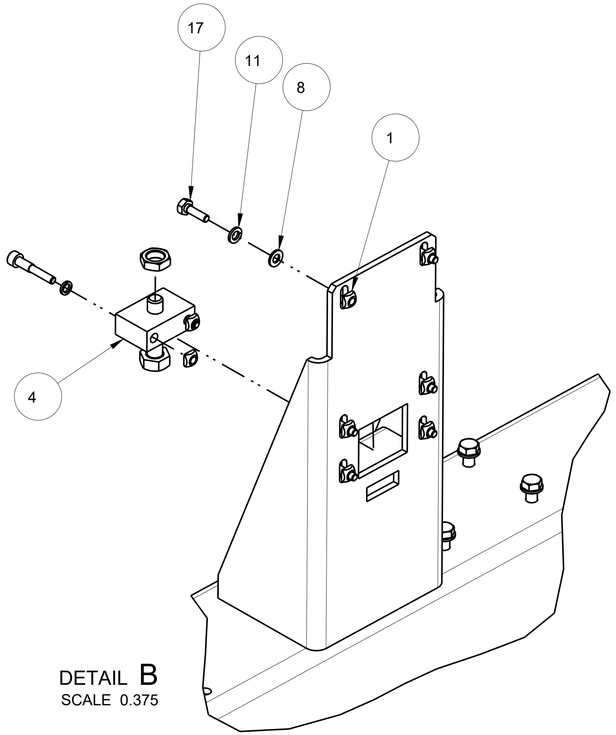

DETAIL B
SCALE 0.375

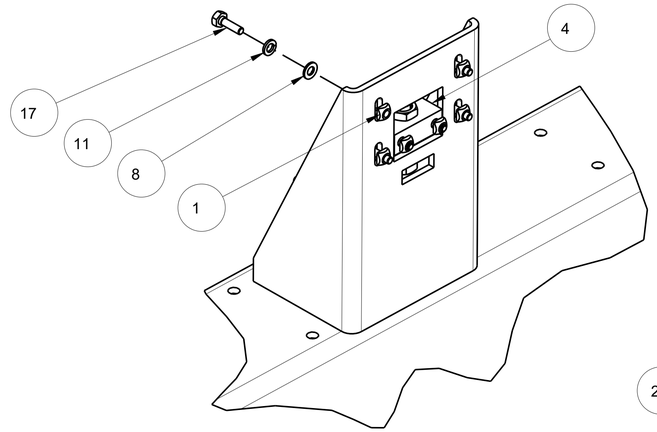

DETAIL C
SCALE 0.375

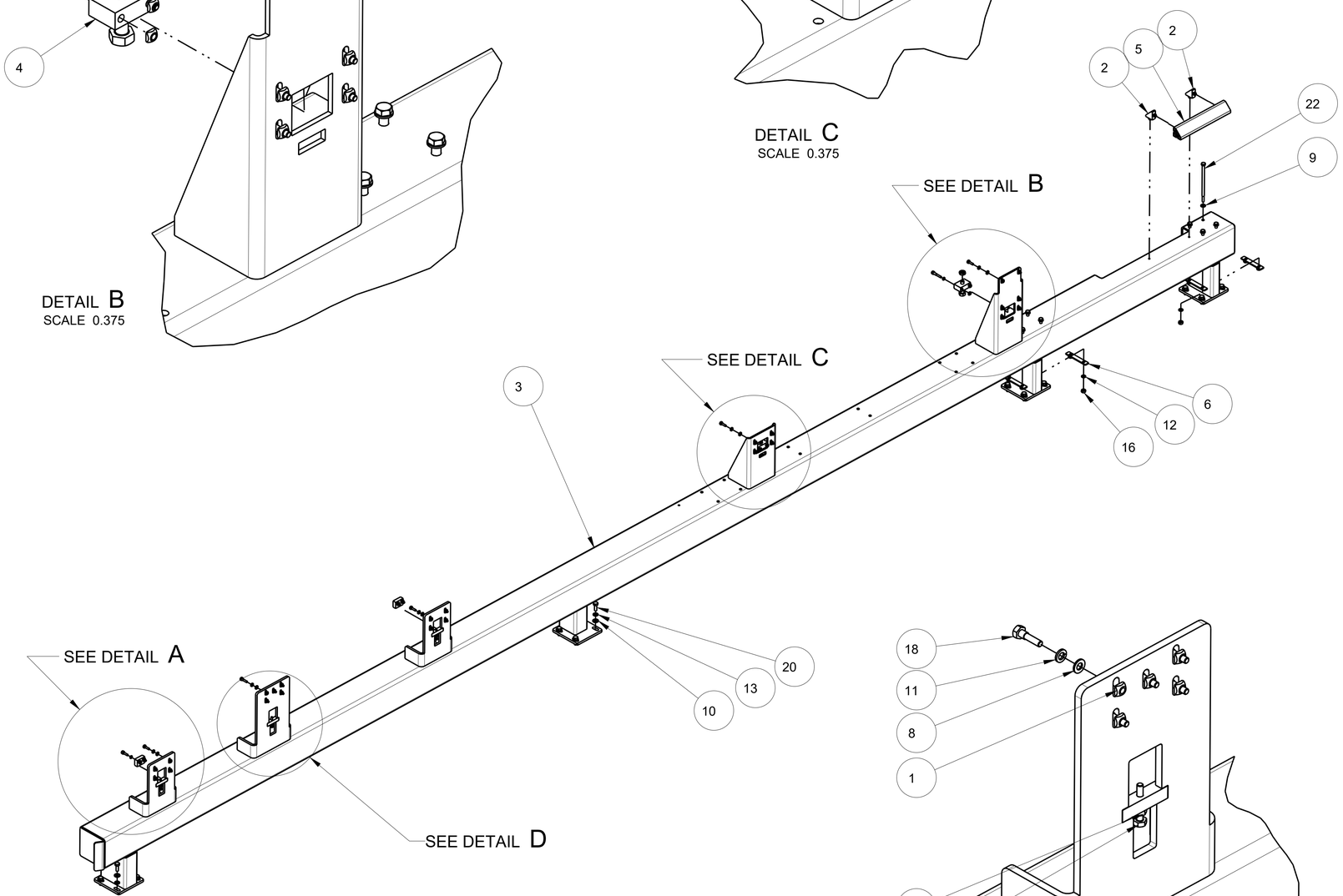

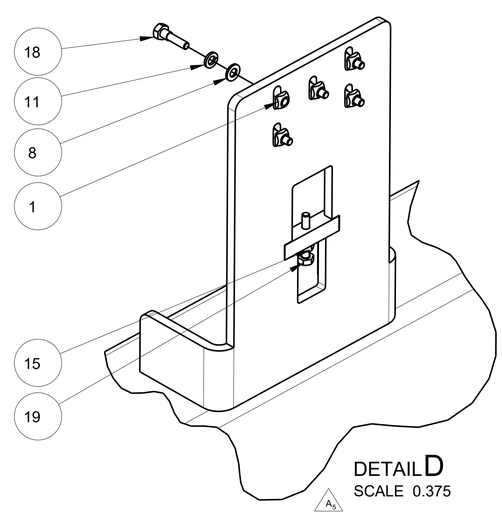

DETAIL D
SCALE 0.375

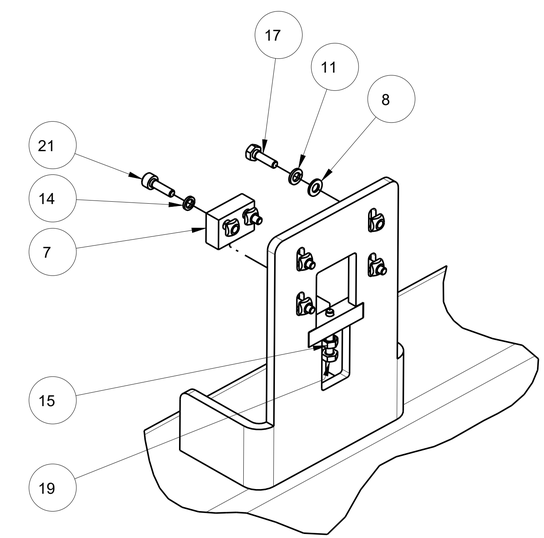

DETAIL A
SCALE 0.375

	ITEM	QTY	DESCRIPTION	PART NUMBER
A1	1	27	SQUARE NUT, M8, MINITEC	09-038064-6000-0
	2	2	ANGLE 19 GD	U5004519P
	3	1	WELDMENT, FIXED BEAM	U5007886M-001
	4	2	ASSY, CARRIER HT ADJ	U5007887M
	5	1	MINITEC 45 X 45 DEG PROFILE	U5007891M
	6	4	SQUARE WASHER	U5008206M
A2	7	2	SBLC JACKING BLOCK	U5017635M
	8	23	M8 FLAT WASHER DIN125A SS	U6002509P_EXP
	9	8	M10 FLAT WASHER DIN125A SS	U6002510P_EXP
	10	16	M12 FLAT WASHER DIN125A SS	U6002511P_EXP
	11	23	M8 STD SPRING LOCK WASHER SS	U6002564P_EXP
	12	8	M10 STD SPRING LOCK WASHER SS	U6002565P_EXP
	13	16	M12 STD SPRING LOCK WASHER SS	U6002566P_EXP
A3	14	4	M8 HIGH COLLAR LOCK WASHER SS	U6002597P_EXP
	15	3	HEX NUT, M8X1.25 SS	U6002618P_EXP
	16	8	HEX NUT, M10X1.50 SS	U6002619P_EXP
	17	18	SCREW HHCS, M8x25 SS	U6002764P_EXP
	18	5	SCREW HHCS, M8x30 SS	U6002765P_EXP
	19	3	SCREW HHCS, M8x45 FULLTHRD SS	U6002768P_1_EXP
	20	16	SCREW HHCS, M12x30 FULLTHRD SS	U6002804P_EXP
A4	21	4	SCREW SHCS, M8x25 SS	U6003080P_EXP
	22	8	SCREW HHCS, M10x190 SS	U6003751P_EXP

REV.	DESCRIPTION	BY	CHK'D
		DATE	DATE
-	--		
-	--		
-	--		
-	--		
A	1) ITEM 1 QTY WAS 29 2) ITEM 7 QTY WAS 3 3) ITEM 14 QTY WAS 6 4) ITEM 21 QTY WAS 6 5) ADDED DETAIL D .NO ECN REQUIRED	KJW 4/25/11	

NOTICE: THIS DRAWING AND ALL DATA, DESIGNS, STRUCTURES AND DESCRIPTIONS SHOWN THEREON ARE OUR PROPERTY. ALL PATENTABLE AND/OR COPYRIGHTABLE MATTER THEREON HAS BEEN PROTECTED BY APPLICATIONS FOR PATENT AND/OR COPYRIGHT. THIS DRAWING IS LOANED FOR A SPECIFIC PURPOSE AND MUST BE RETURNED ON DEMAND. AND MAY NOT BE COPIED, REPRODUCTED, OR DUPLICATED IN WHOLE OR IN PART, WITHOUT OUR SPECIFIC AUTHORIZATION IN WRITING.

UNLESS OTHERWISE SPECIFIED: ALL DIMENSIONS MILLIMETER, DO NOT SCALE DRAWING
GENERAL TOLERANCE: HOLE SLOT ±12 OTHERS ±12
CONCENTRICITY ±0.02 PERPENDICULARITY ±0.02/CM ANGULARITY ±0.25°
BREAK SHARP CORNERS REMOVE ALL BURRS FINISHED SURFACES 3.2 √(125)
METRIC

MATERIAL: SEE BOM
FINISH: --
--

DRW BY: R THOMAS	CHK'D :	ENGR. BY : W CASH
DATE: 07-DEC-10	DATE :	DATE : .....

TITLE: ASSY, FIXED SIDE, SBLC WIDTH

WestRock PACKAGING SYSTEMS ATLANTA, GA, USA

SCALE	MATERIAL CODE	DRW. SIZE	DRW. N°	REV	VER 3	SHEETS
0.094	999	D	U5007885M-001	A		1/1